Series TLLC

Tension Link Load Cell (10t ~ 50t)

The model TLLC series, designed for tension measurement and weighing applications, are reliable and easy to install.

- Durable design provide high safety.
- Alloy tool steel construction.

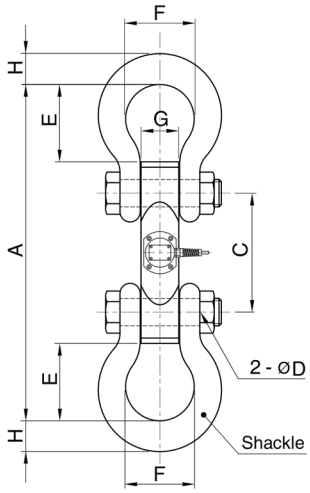

SPECIFICATIONS

TYPE	TLLC
Rated capacity (R.C.)	10, 20, 30, 50 ton
Rated output(R.O.)	1mV/V ± 0.5%
Non-linearity	≤0.1% R.O.
Hysteresis	≤0.1% R.O.
Non-repeatability	≤0.05% R.O.
Creep error	≤0.03% in 20min.
Zero balance	≤1% R.O.
Compensated temperature range	-10 ~ 70°C
Operating temperature range	-20 ~ 80°C
Temp. effect on rated output	≤0.03% LOAD/10°C
Temp. effect on zero balance	≤0.03% R.O./10°C
Terminal input resistance	800 Ohms ± 20 Ohms
Terminal output resistance	700 Ohms ± 10 Ohms
Insulation resistance (Min.)	2000 MOhms at 50V DC
Excitation voltage	10V(Recommended), 15V(Max.)
Electrial connection	Ø7mmx6m(22AWG x 4Core Shielded)
Protection class	meets IP 67
Safe overload	150% R.C
Ultimate overload	500% R.C

Dimension

Rated Capacity	A	B	C	D	E	F	G	H	Shackle	Weight (kg) ( ) Without shackle
10t (98.07kN)	444	256	170	37	94	82	48	35x32	G2130-12T "Crosby" or eq.	16.1(5.5)
20t (196.1kN)	628	336	220	52	146	127	70	57x45	G2130-25T "Crosby" or eq.	48.6(17.8)
30t (294.2kN)	712	400	260	60	156	146	80	61x51	G2130-35T "Crosby" or eq.	68.5(21.1)
50t (490.4kN)	934	496	330	72	219	184	100	80x67	G2130-55T "Crosby" or eq.	130(41)

ORDERING INFORMATION

TLLC - 20T

- TLLC: TYPE — TLLC : Load Cell + Shackle
- 20T: CAPACITY — 10, 20, 30, 50ton

WIRING INFORMATION

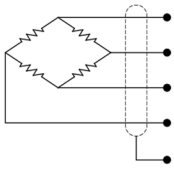

RED	:	EXC. (+)
GREEN	:	SIG. (+)
WHITE	:	EXC. (-)
BLUE	:	SIG. (-)
BARE	:	GND.

* Specifications are subject to change without notice