Model CTLPLC Series

Compression & Tension
Low Profile Load Cell (200 ~ 1000kg)

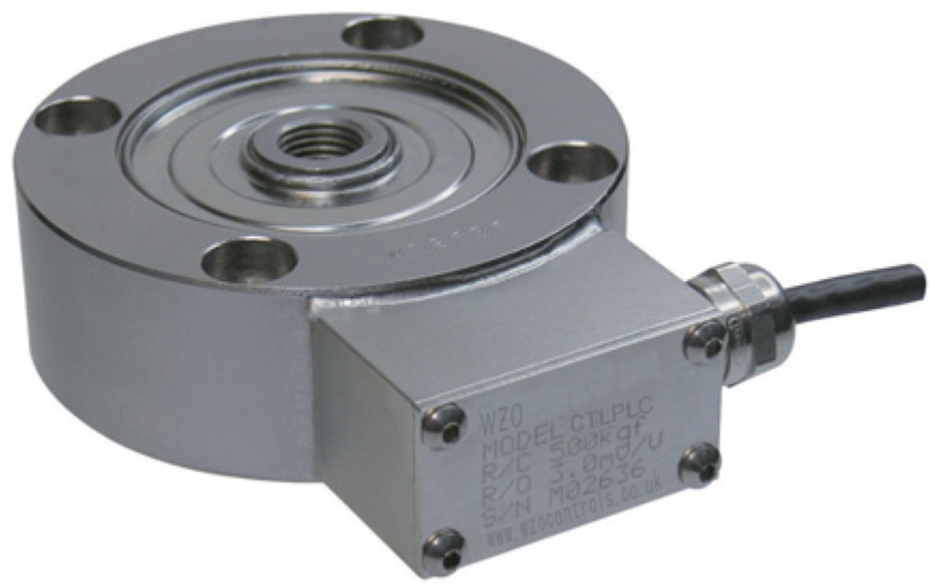

The model CTLPLC is a low profile compression & tension pancake type load cell. All units are machined from a solid billet of stainless steel and sealed with welded diaphragms.

- 17-4PH Stainless steel construction for high accuracy and corrosion resistance
- Hermetically sealed
- High rated output(3mV/V)

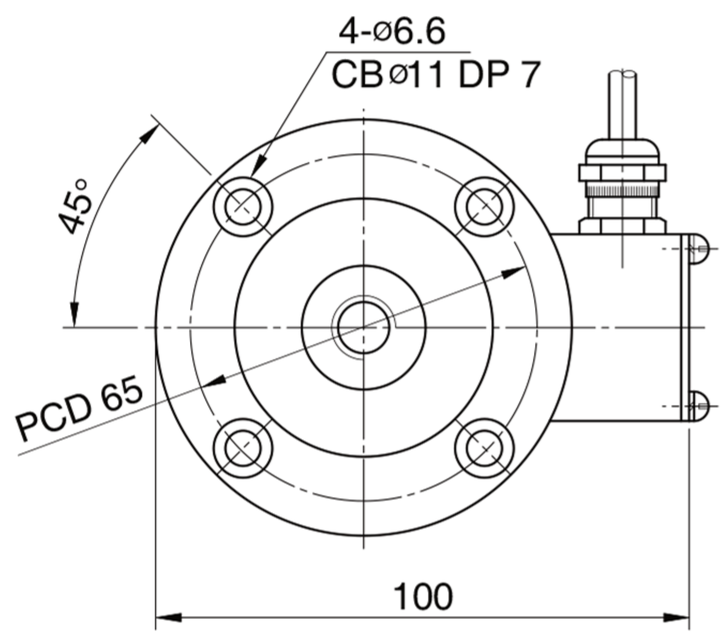

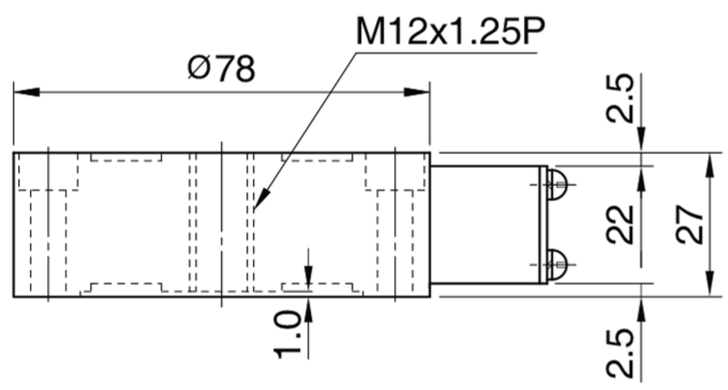

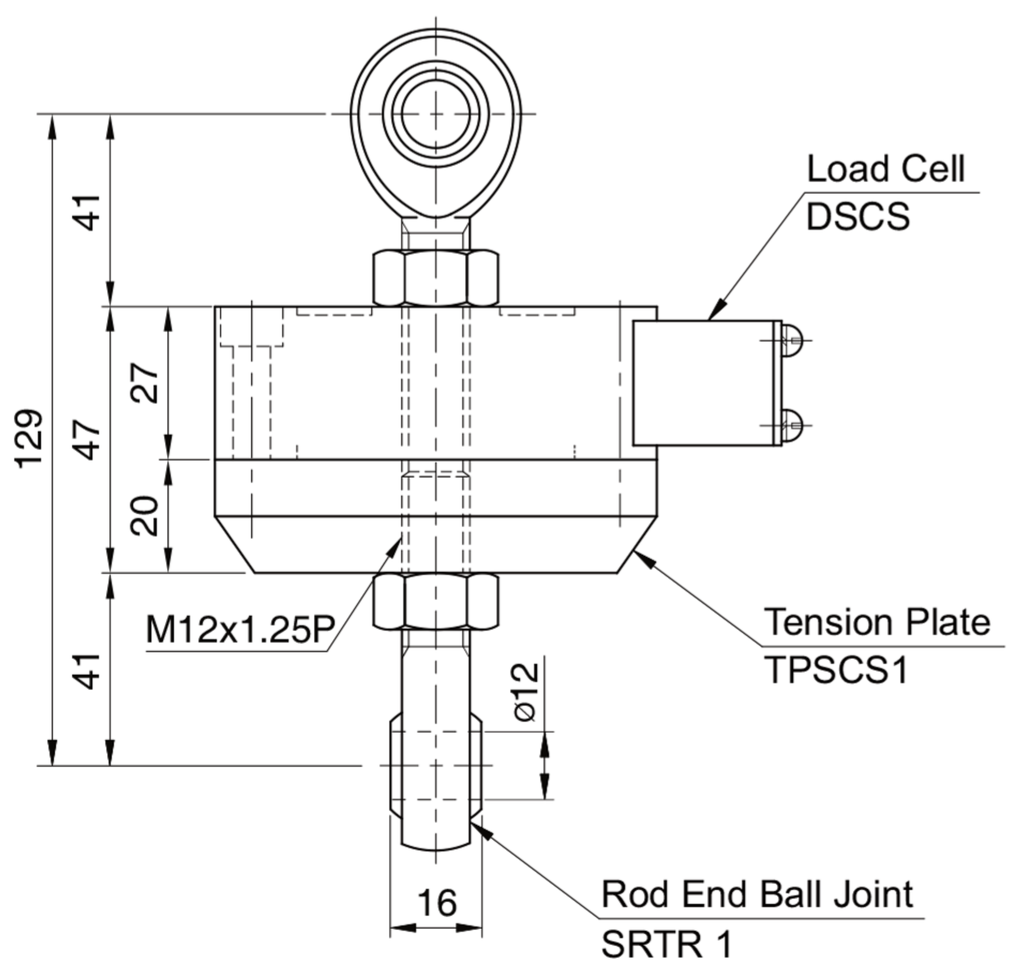

SPECIFICATIONS

MODEL	CTLPLC
Rated capacity (R.C.)	200, 500, 1000kg
Rated output(R.O.)	3.0mV/V ± 0.3%
Non-linearity	≤0.05% R.O.
Hysteresis	≤0.03% R.O.
Non-repeatability	≤0.03% R.O.
Creep error	≤0.03% in 20min.
Zero balance	≤1% R.O.
Compensated temperature range	-10 ~ 70°C
Operating temperature range	-20 ~ 80°C
Temp. effect on rated output	≤0.03% LOAD/10°C
Temp. effect on zero balance	≤0.03% R.O./10°C
Terminal input resistance	700 Ohms ± 10 Ohms
Terminal output resistance	700 Ohms ± 10 Ohms
Insulation resistance (Min.)	2000 MOhms at 50V DC
Excitation voltage	3~12V(Recommended), 15V(Max.)
Electrial connection	ø5mmx3m(22AWG x 4Core Shielded)
Protection class	meets IP 68
Safe overload	150% R.C
Ultimate overload	300% R.C

ORDERING INFORMATION

CTLPLC - 200

- CTLPLC: MODEL CTLPLC
- 200: CAPACITY 200, 500, 1000kg

WIRING INFORMATION

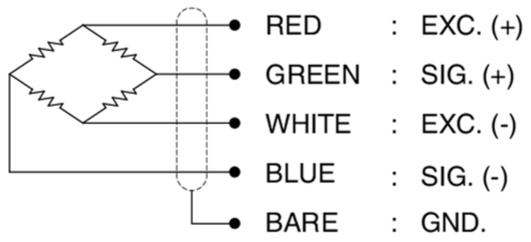

Weight = 0.9kg

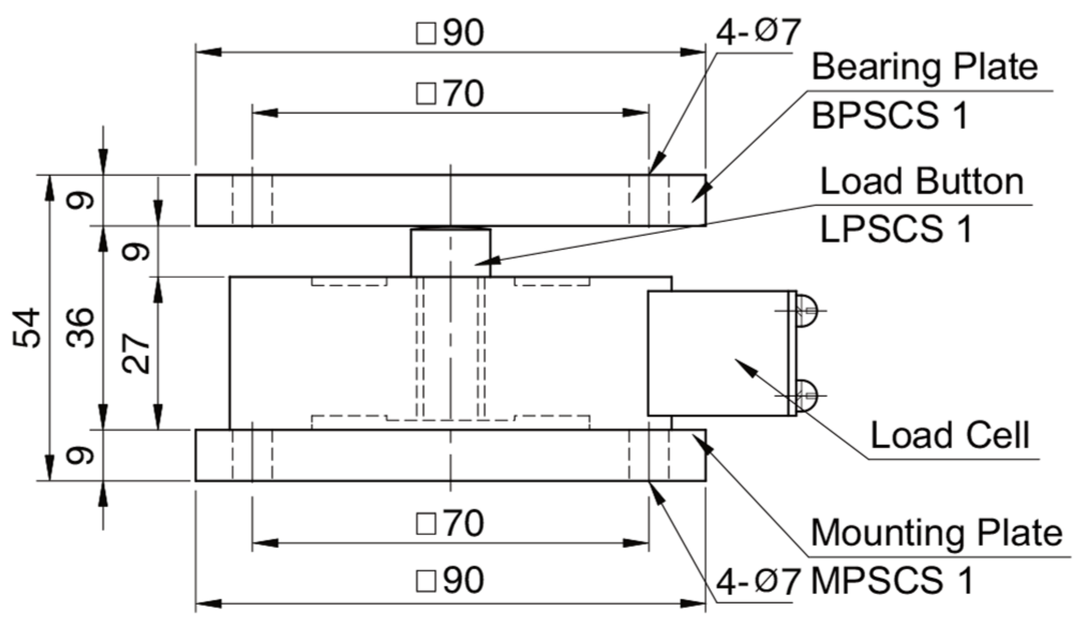

* Specifications are subject to change without notice

APR. 2020

BONGSHIN LOADCELL CO., LTD.

55, Seobuk-ro, Gajang Ind.Complex, Osan-si, Korea / 18103
TEL : 82-31-742-6661 www.bongshin.com
FAX : 82-31-742-6664 E-mail : loadcell@bongshin.com